100cc REEDJET USA – TaG

FEATURES

Cylinder Volume	100 cm³ max
Bore	48.20 mm
Max. bore	48.53 mm
Stroke	54.05 mm max
Cooling system	Air
Inlet system	Reed valve
Number of carbs	1

Tillotson Carburettor	HW-33A Ø24mm	Cylinder / crankcase transfers n°	3 / 3
Number of piston rings	1	Transfers / Exhaust ports number	3 / 3
Big end conr. ball-bearing diam.	20x26x15	Combustion chamber shape	Spherical
Crankshaft ball-bearing diam.	25x52x15	Selettra ignition (adjustable)	Analogue 2 Poles
Small end conr. ball-bearing diam.	14x18x18	Distance between Conrod centres	102 mm

DESCRIPTION OF THE MATERIAL	
Conrod material	Steel
Crankshaft material	Steel
Head material	Aluminium
Cylinder material	Aluminium
Liner material	Cast Iron
Crankcase material	Aluminium
Piston material	Aluminium
Piston rings material	Cast Iron
Exhaust muffler material	Sheet-steel
Ball-bearings	6205 type

PISTON

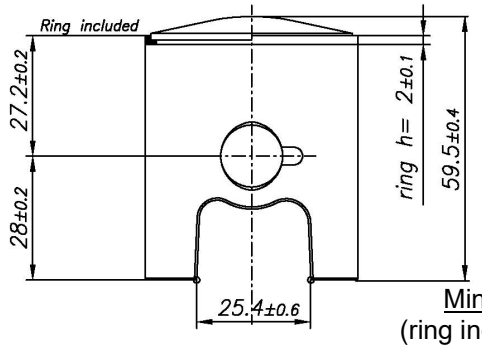

Min. Weight
(ring included) 95 g

DISTANCE BETWEEN CONROD CENTERS

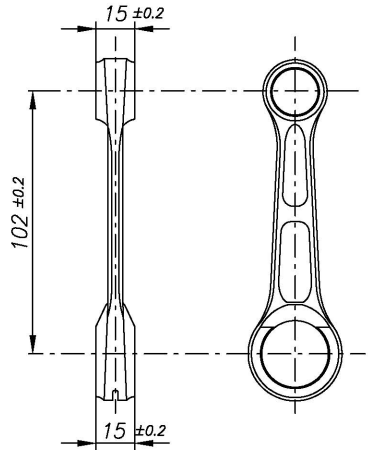

Min. Weight 110 g

CRANKSHAFT

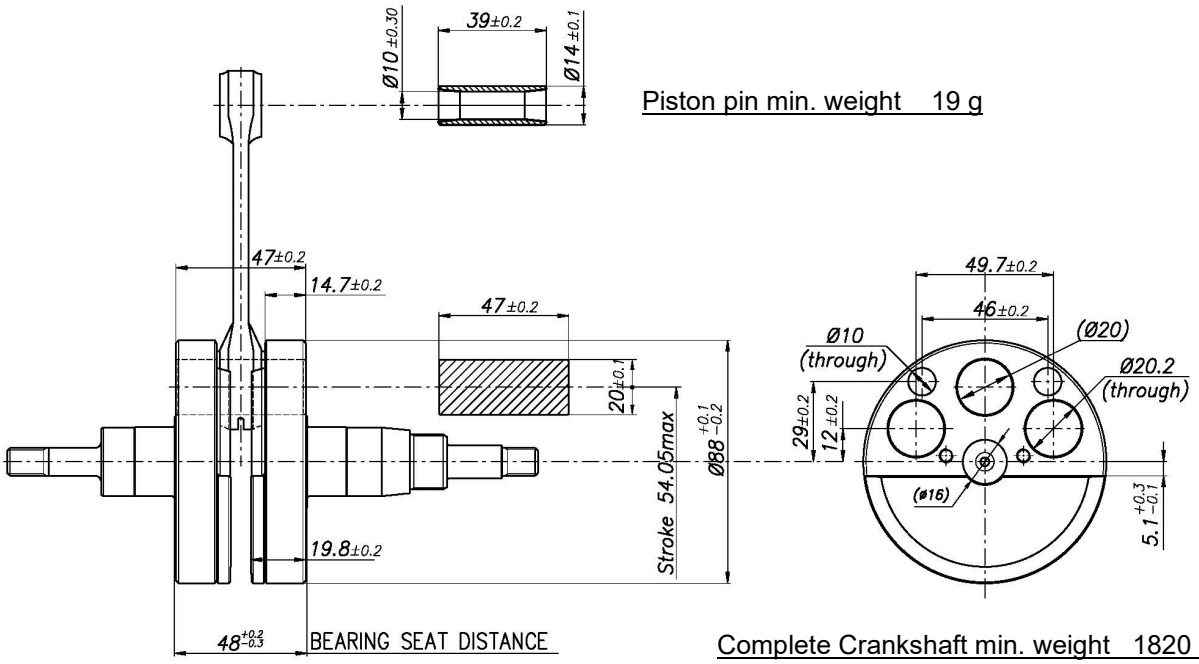

Piston pin min. weight 19 g

Complete Crankshaft min. weight 1820 g

CYLINDER DEVELOPMENT

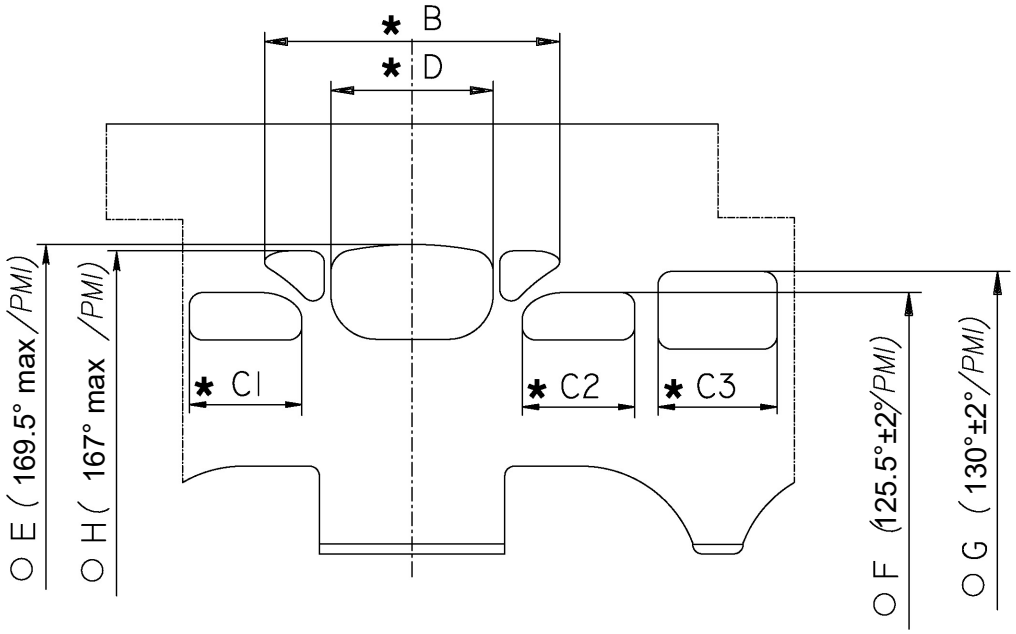

B	≤ 48.2 mm
C1 = C2	≤ 27.2 mm
C3	≤ 27 mm
D	≤ 34 mm
E	169.5° max
F	125.5° ±2°
G	130° ±2°
H	167° max

* *CHORDAL READING*

○ *ANGULAR READING BY INSERTING A 0.2x5 mm GAUGE*

CYLINDER BASE VIEW

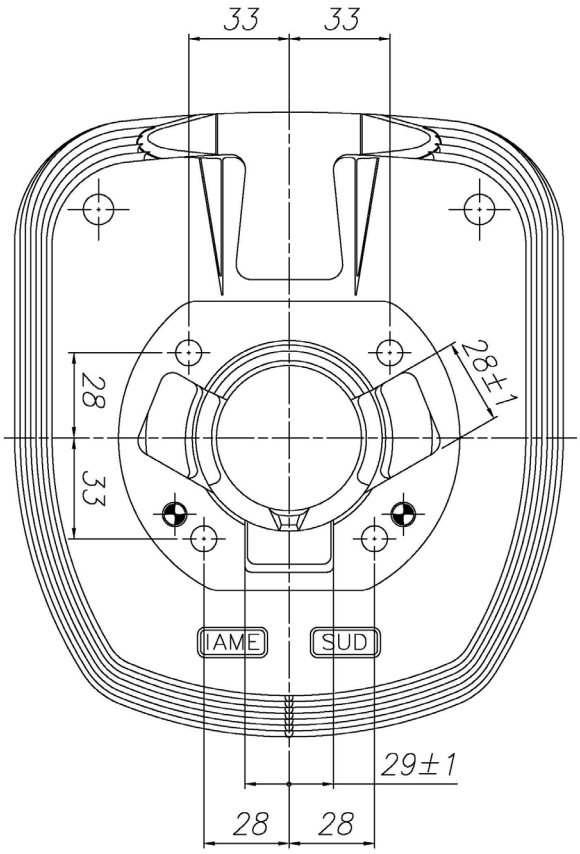

CYLINDER CROSS SECTION VIEW

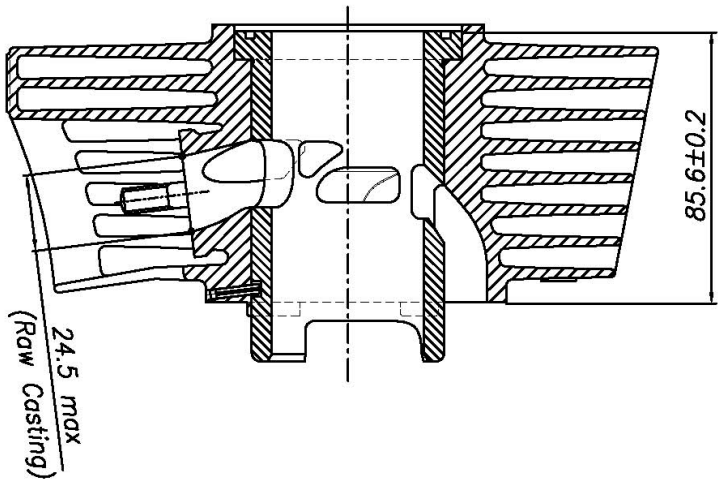

COMBUSTION CHAMBER VIEW	CRANKCASE INSIDE VIEW
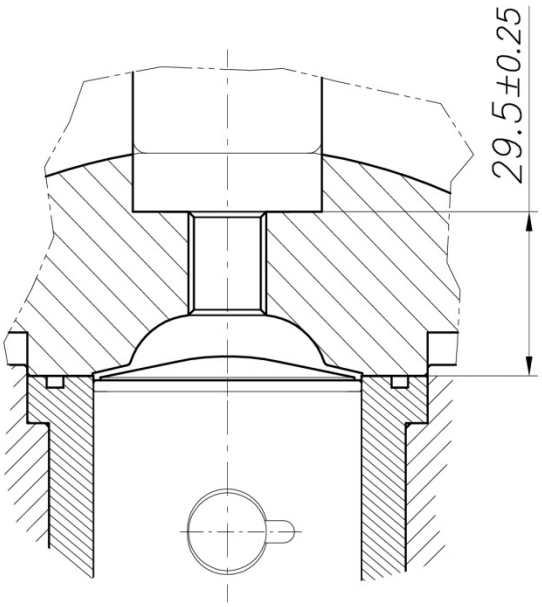	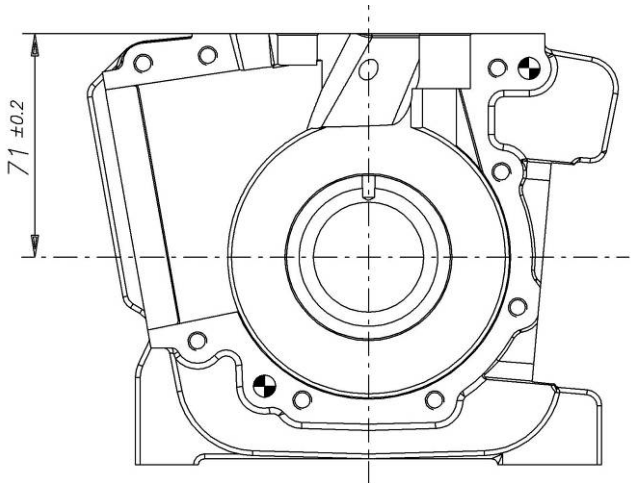
SQUISH MIN.= 0.0413" (1.05 mm) ***(measured with 0.0625" (1/16") / Ø1.58mm solder)***	REEDS DIMENSIONS
	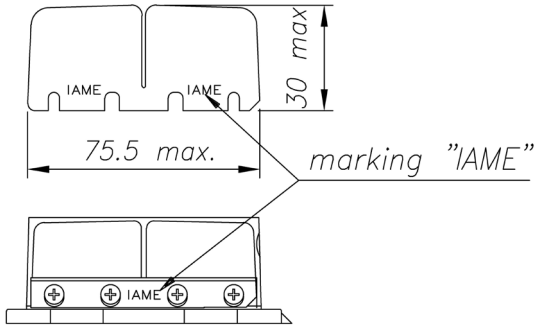 **Genuine IAME fiber glass reeds min. thickness 0.30mm**
INLET CONVERYOR DIMENSIONS	VENTURI CARB. DIMENSIONS
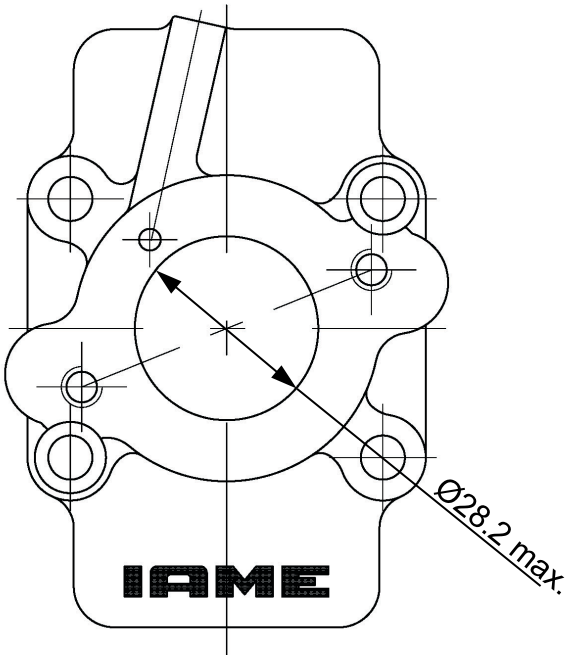	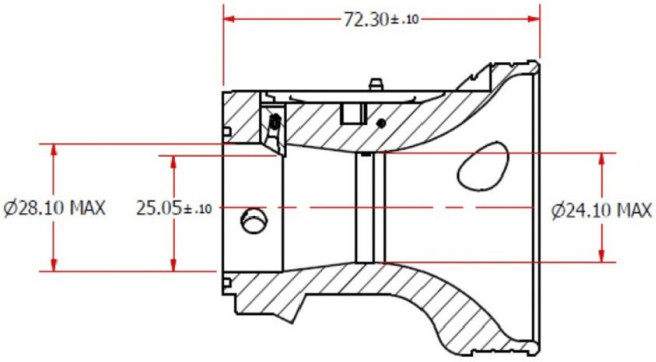 *TILLOTSON MOD. HW-33A*

CRANKCASE WIDTH DIMENSIONS

DRIVE SIDE

IGNITION SIDE

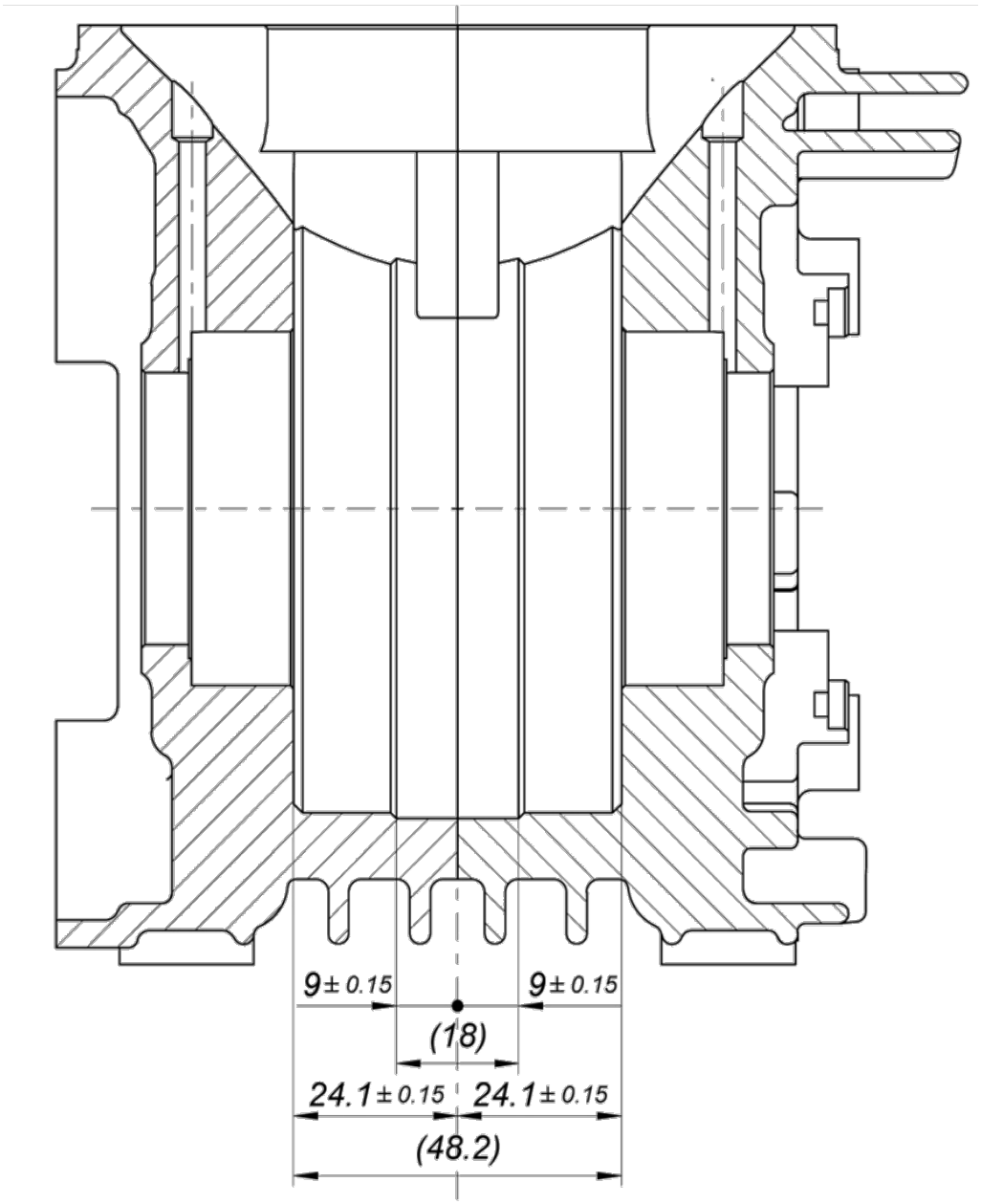

INLET SILENCER	SPONGE FILTER INLET SILENCER
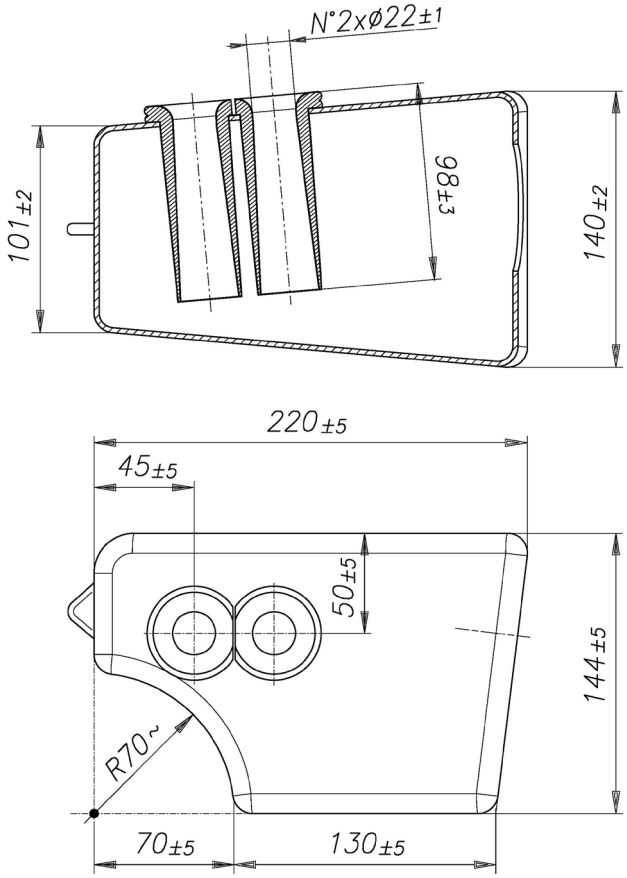	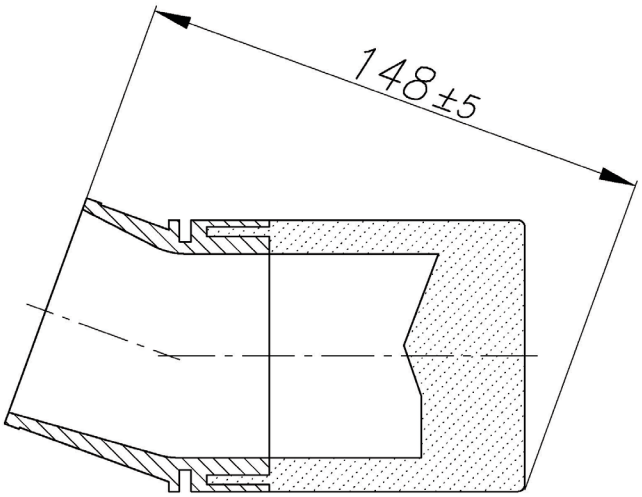
EXHAUST MANIFOLD	EXHAUST MANIFOLD RESTRICTED
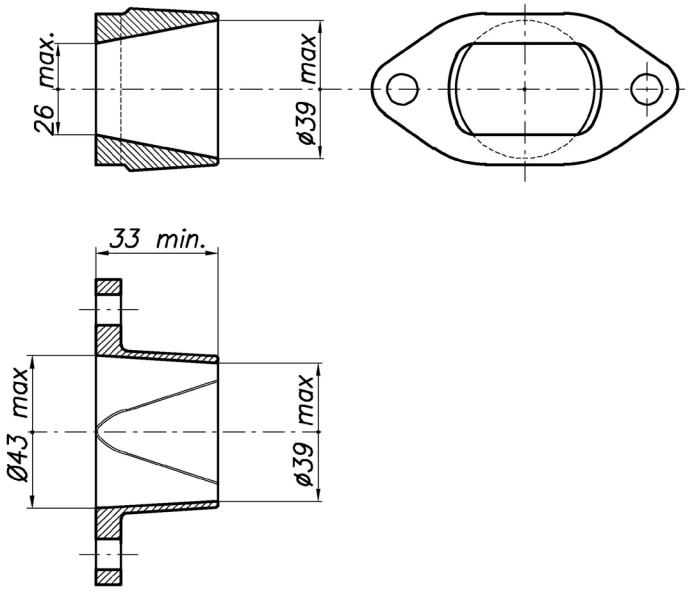	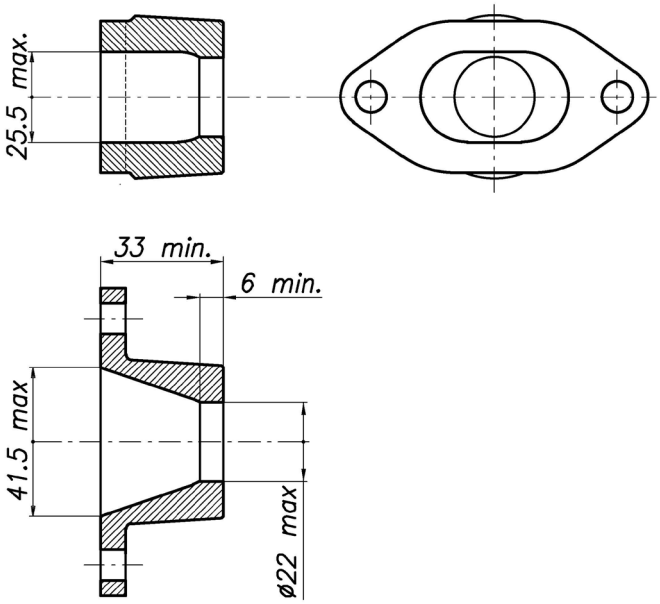

INLET SILENCER TUBES NEW TYPE

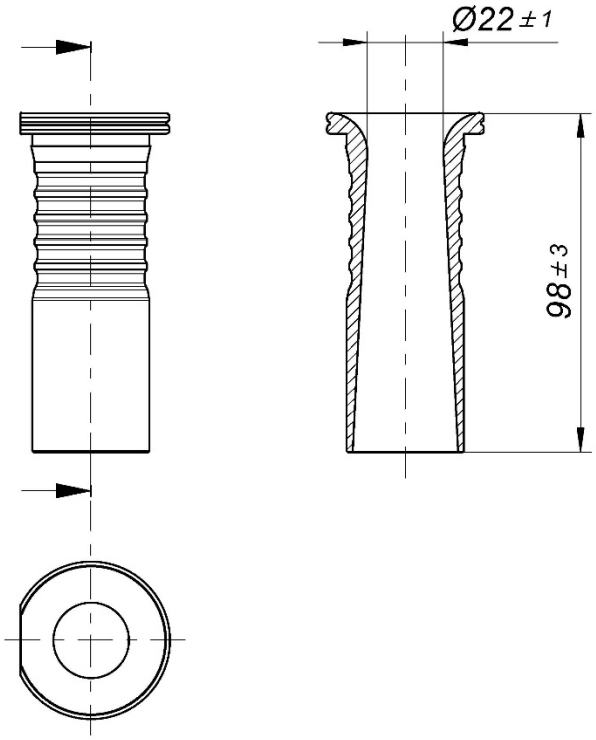

PHOTO IDENTIFICATION OF PERMISSIBLE INLET SILENCER TUBES

OLD TYPE **NEW TYPE**

RAIN COVER INLET SILENCER – DRAWING

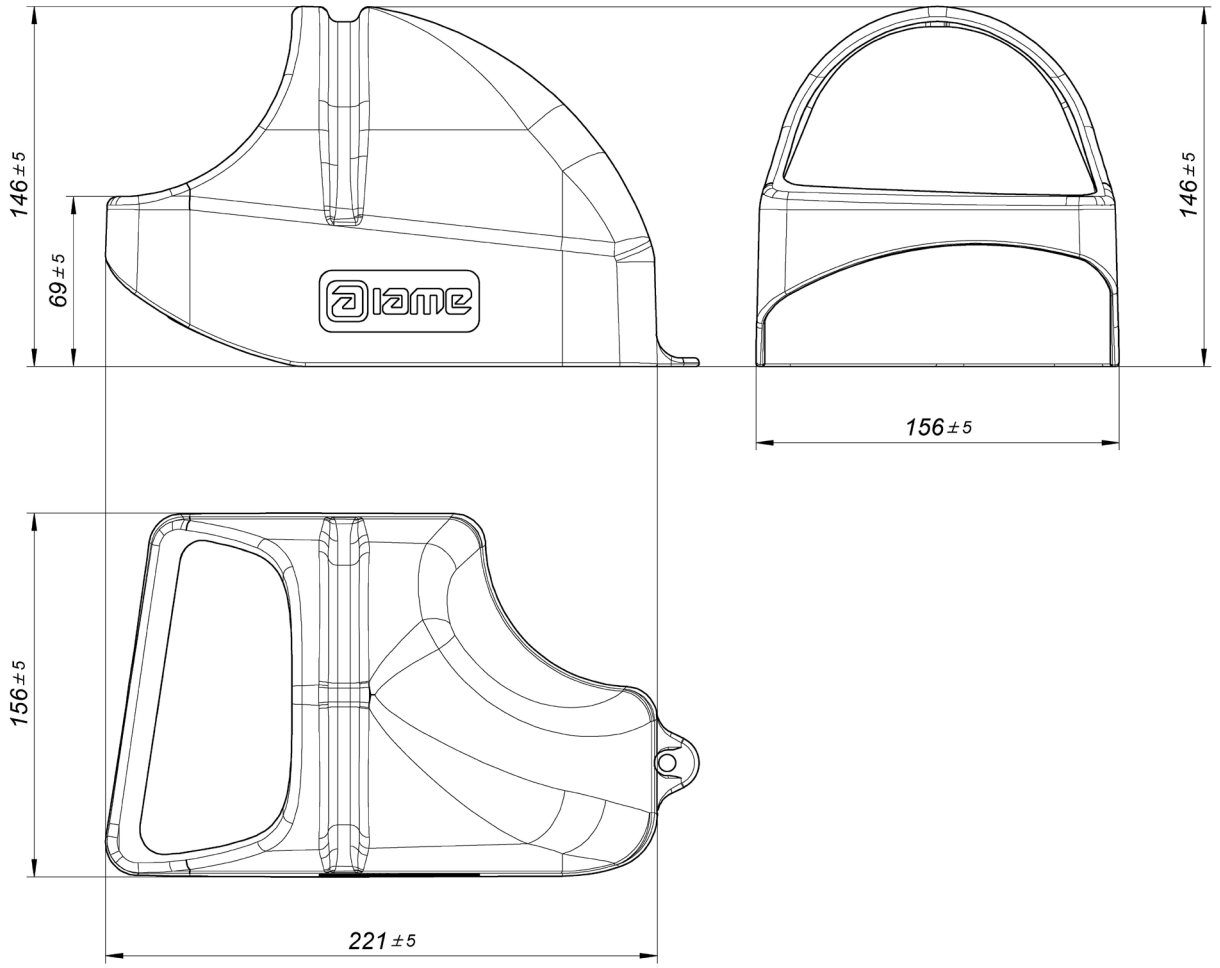

PHOTO IDENTIFICATION OF RAIN COVER INLET SILENCER

DESCRIPTION OF THE CLUTCH

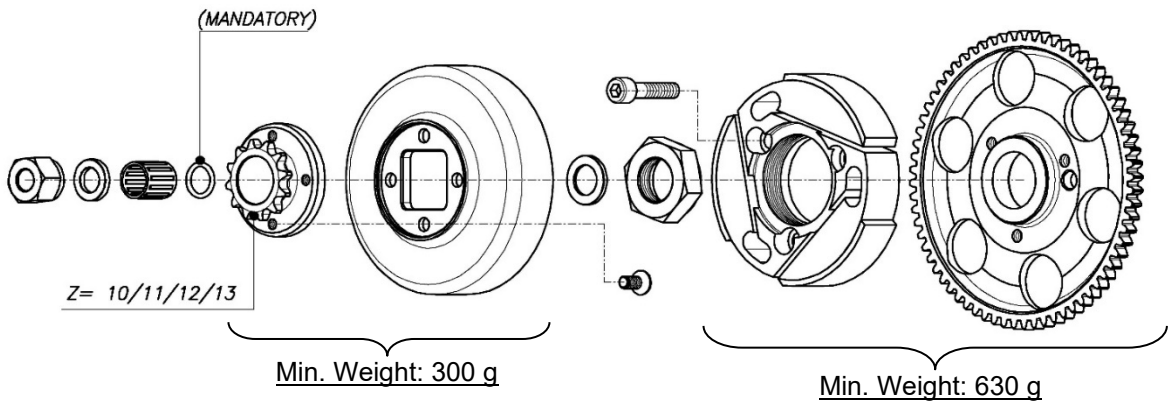

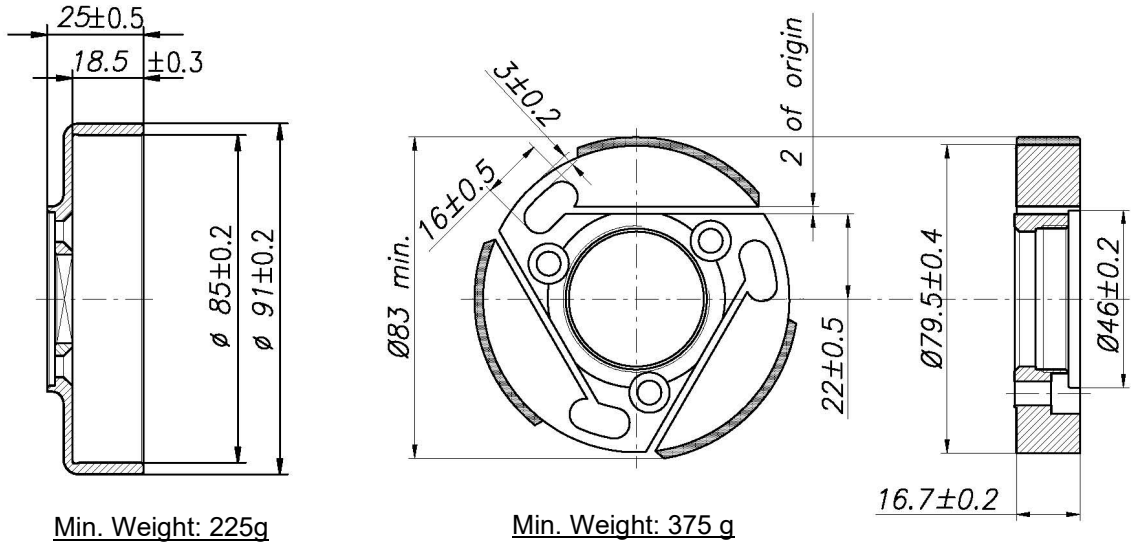

EXHAUST MUFFLER VIEW AND DIMENSIONS

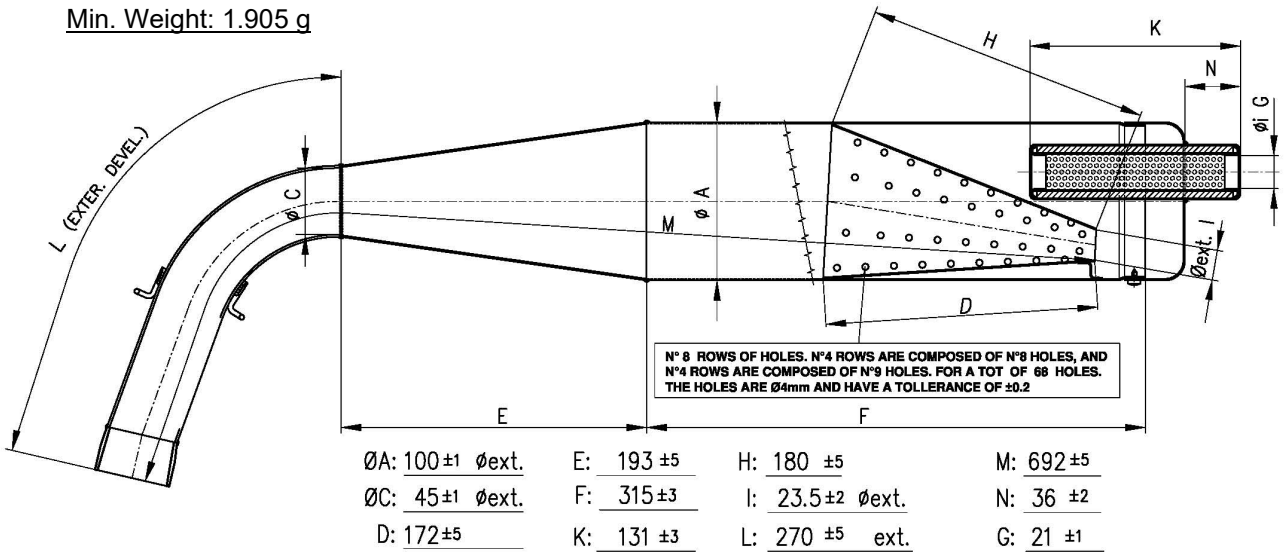

WIRING DIAGRAM

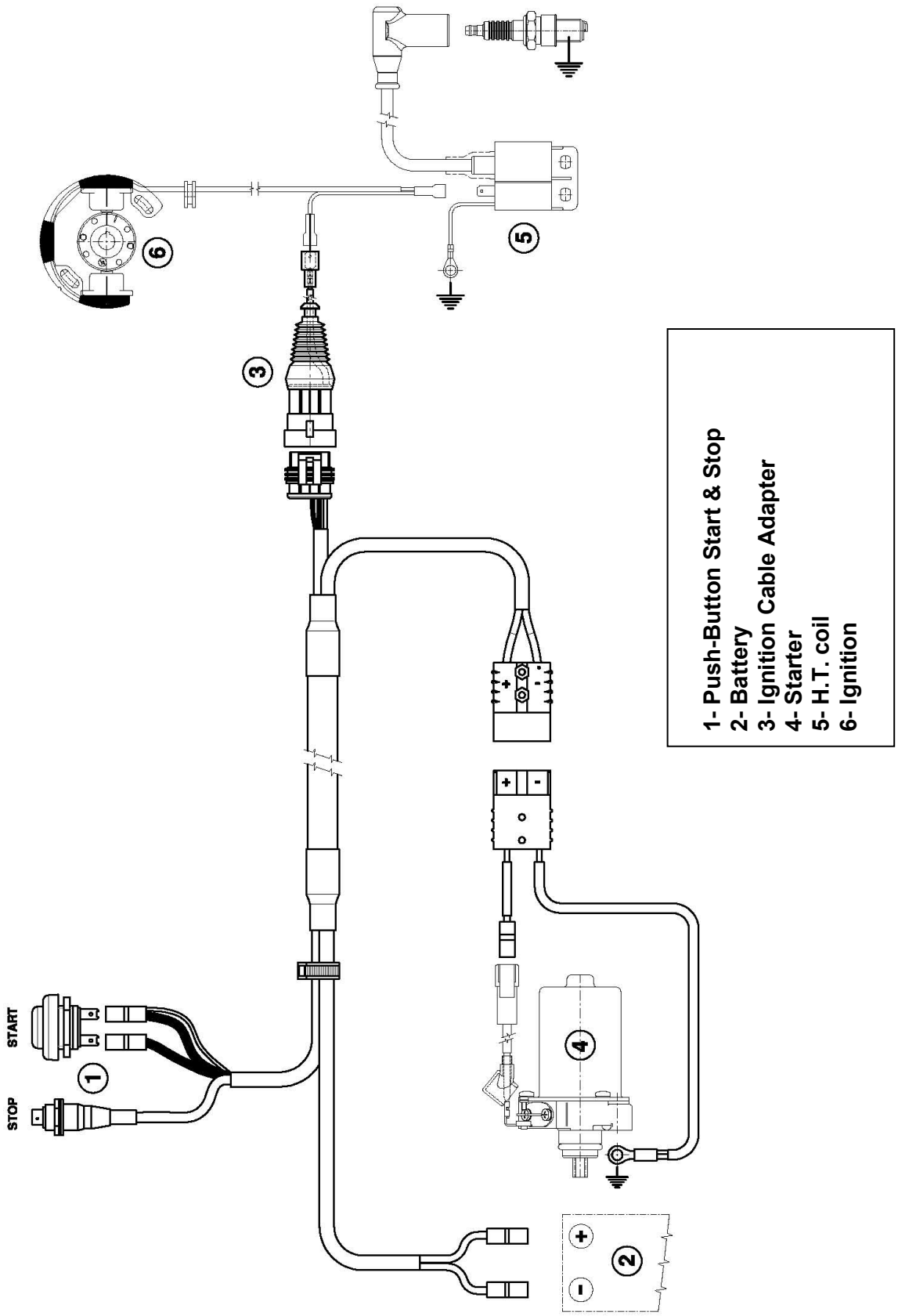

PHOTO COMPLETE WIRING

PHOTO OF IGNITION / PHOTO OF H.T. COIL (SELETTRA ANALOGUE 2 POLES)

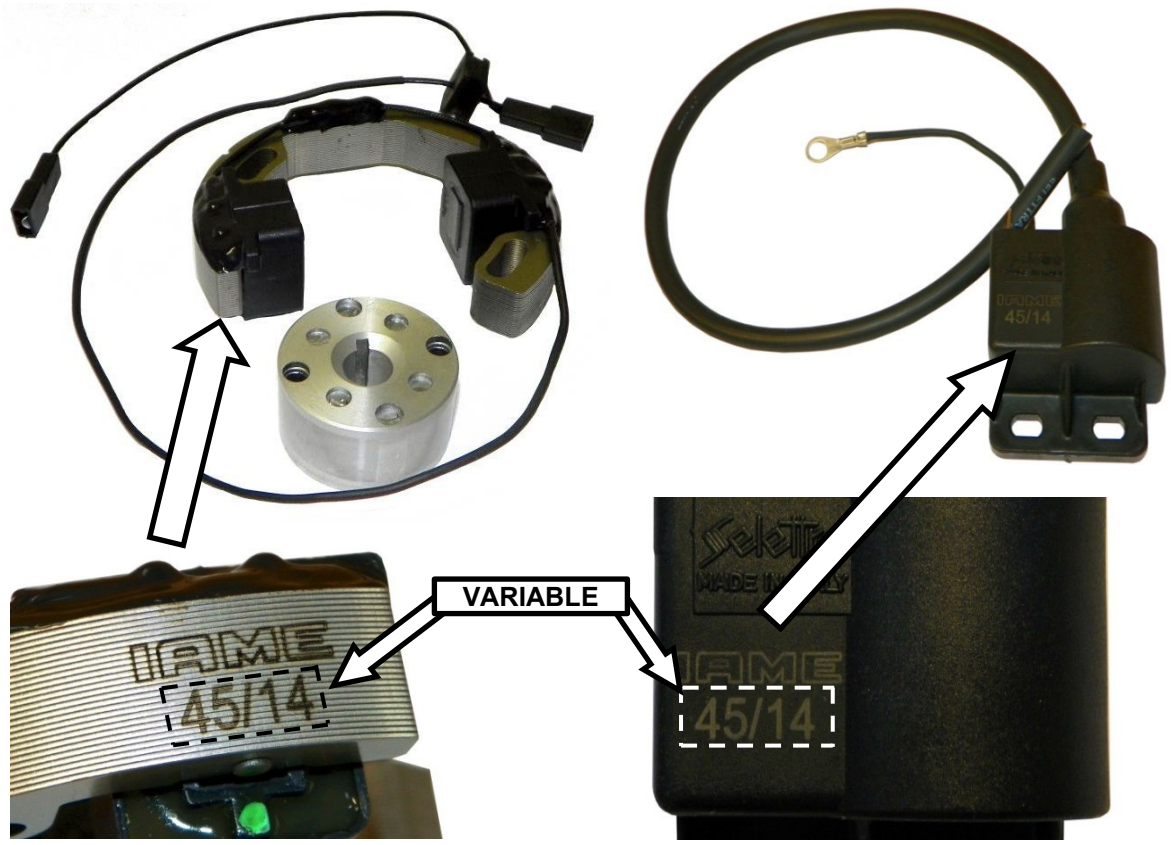

ALTERNATIVE WIRING LOOM

ALTERNATIVE WIRING LOOM DIAGRAM

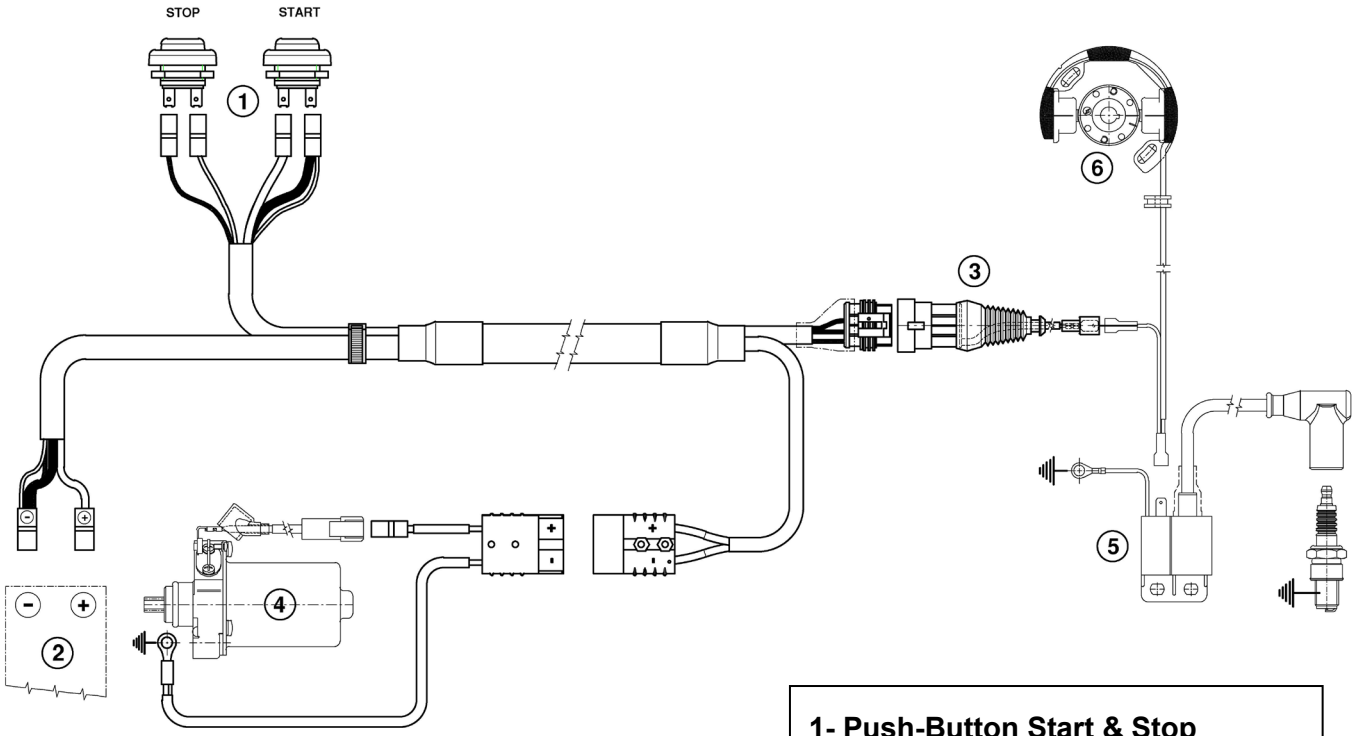

1- Push-Button Start & Stop
2- Battery
3- Ignition Cable Adapter
4- Starter
5- H.T. coil
6- Ignition

ALTERNATIVE WIRING LOOM

ALTERNATIVE WIRING LOOM DIAGRAM

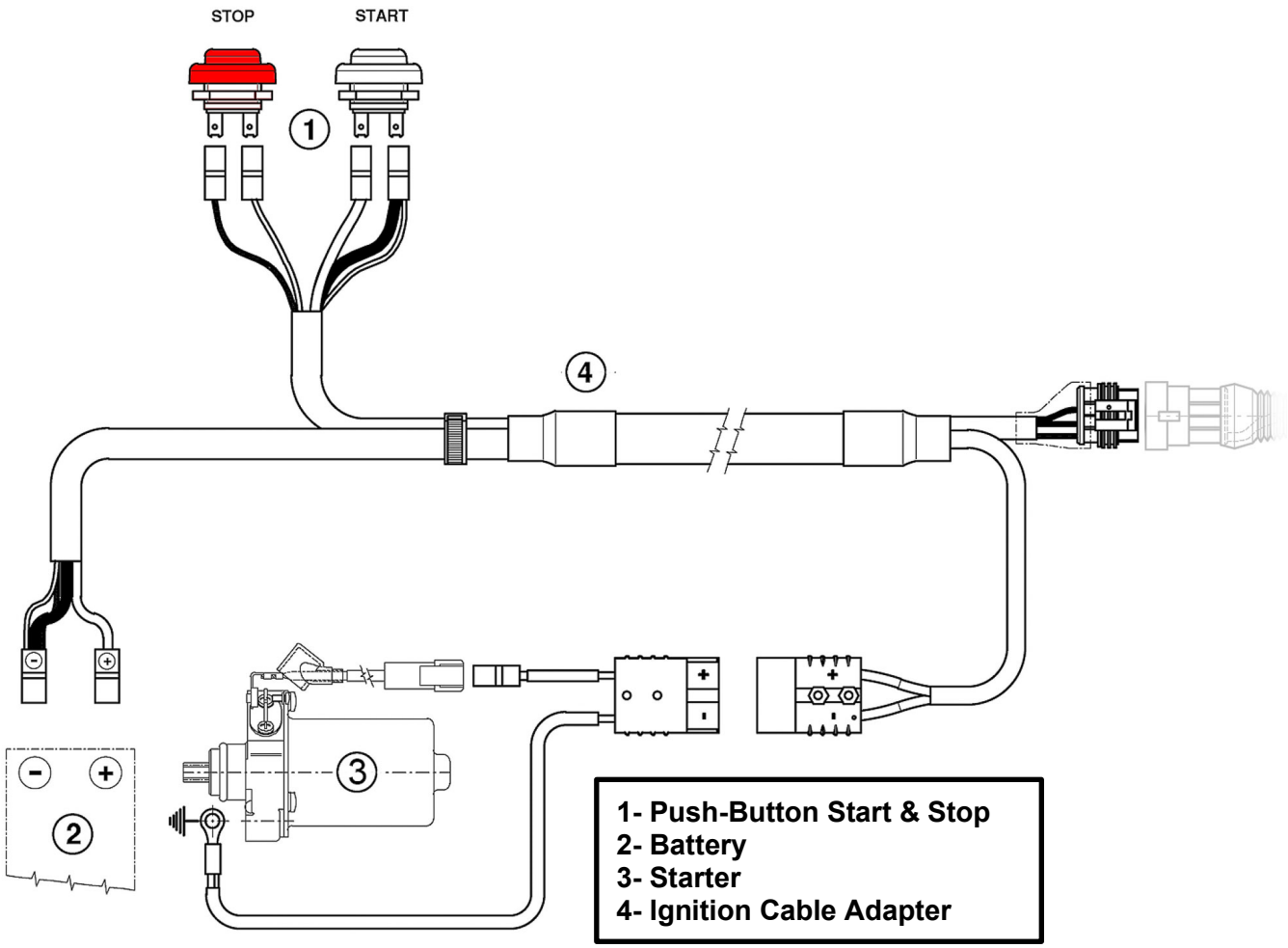

STICKER APPLICATION AREA

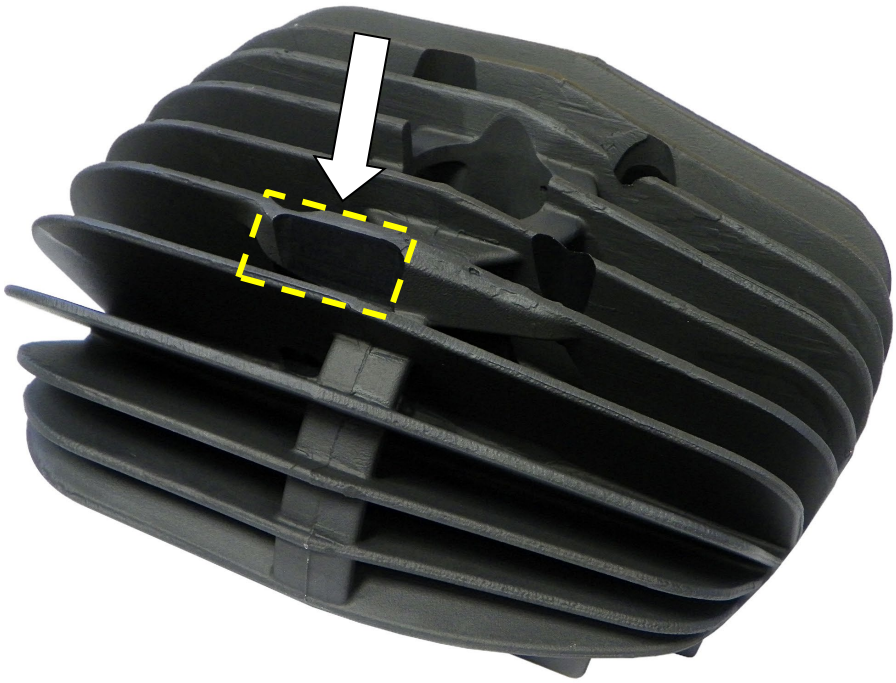

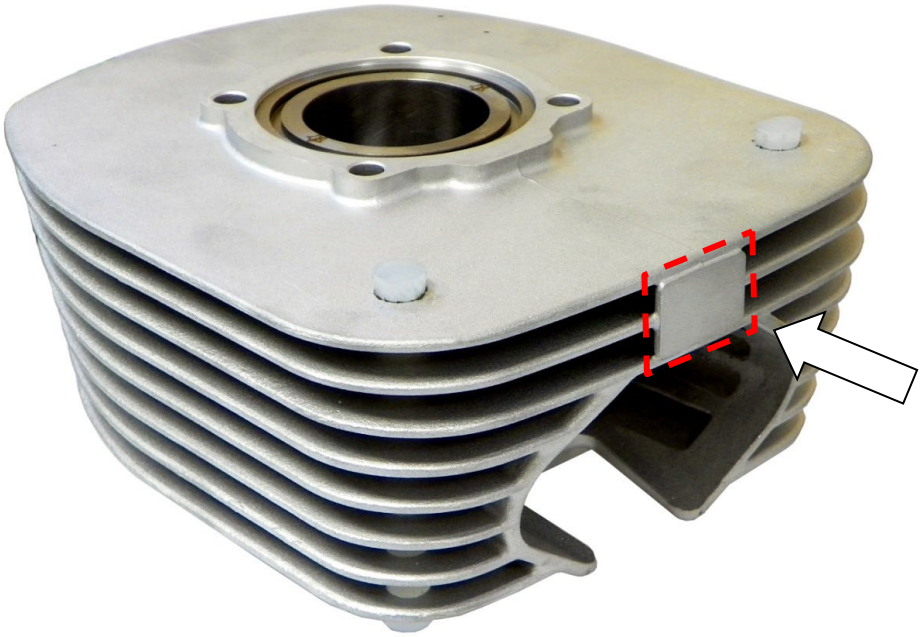

CYLINDER IDENTIFICATION MARKING

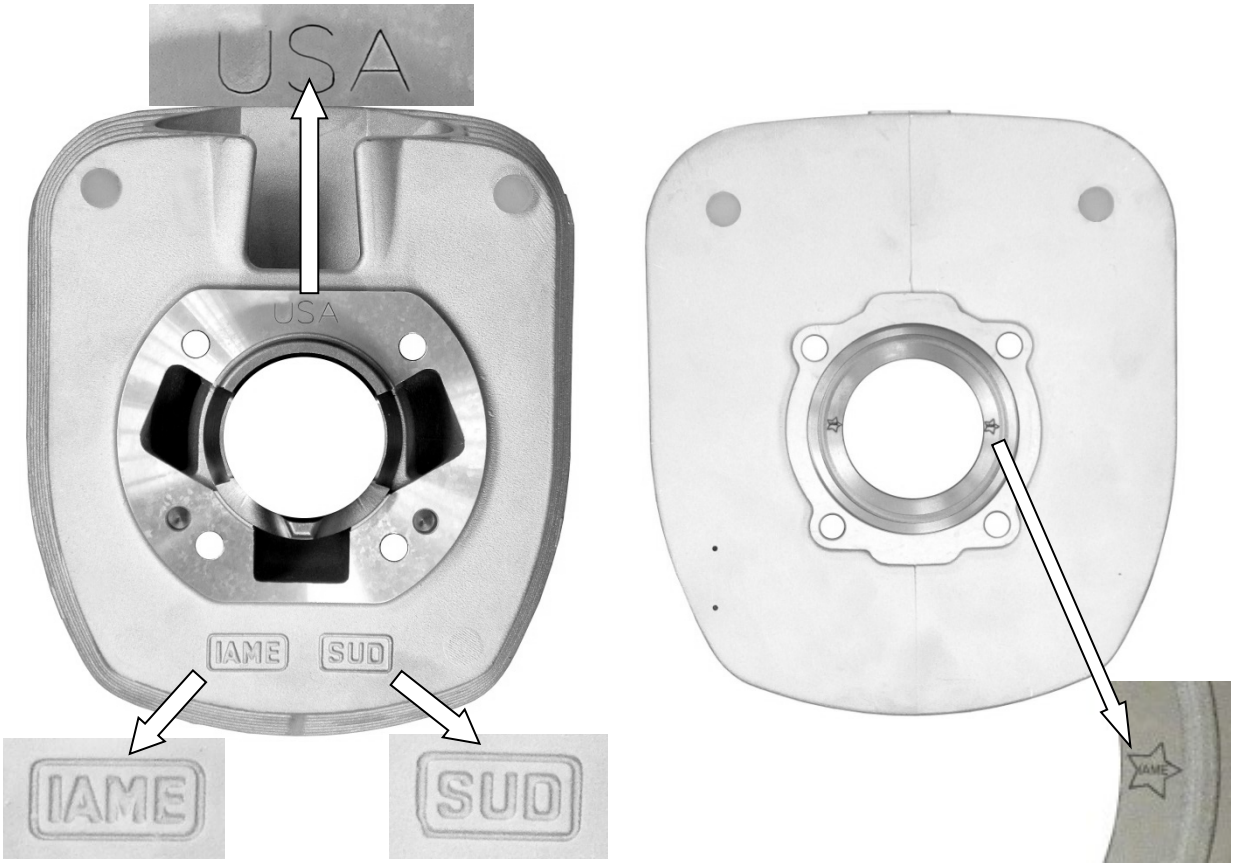

CRANKCASE IDENTIFICATION MARKING

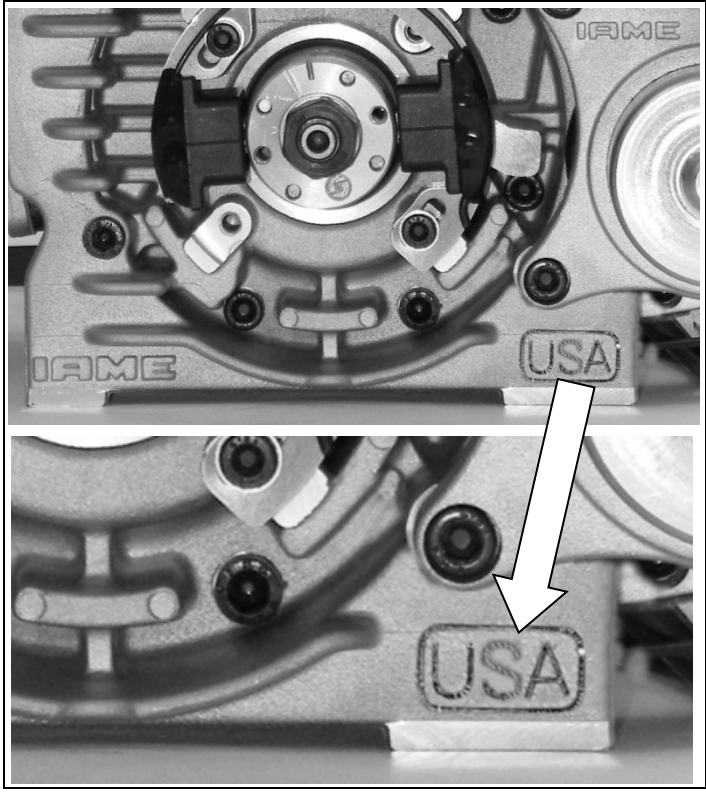

HEAD IDENTIFICATION MARKING

INLET SILENCER - “IAME” IDENTIFICATION MARKING

PISTON IDENTIFICATION MARKING

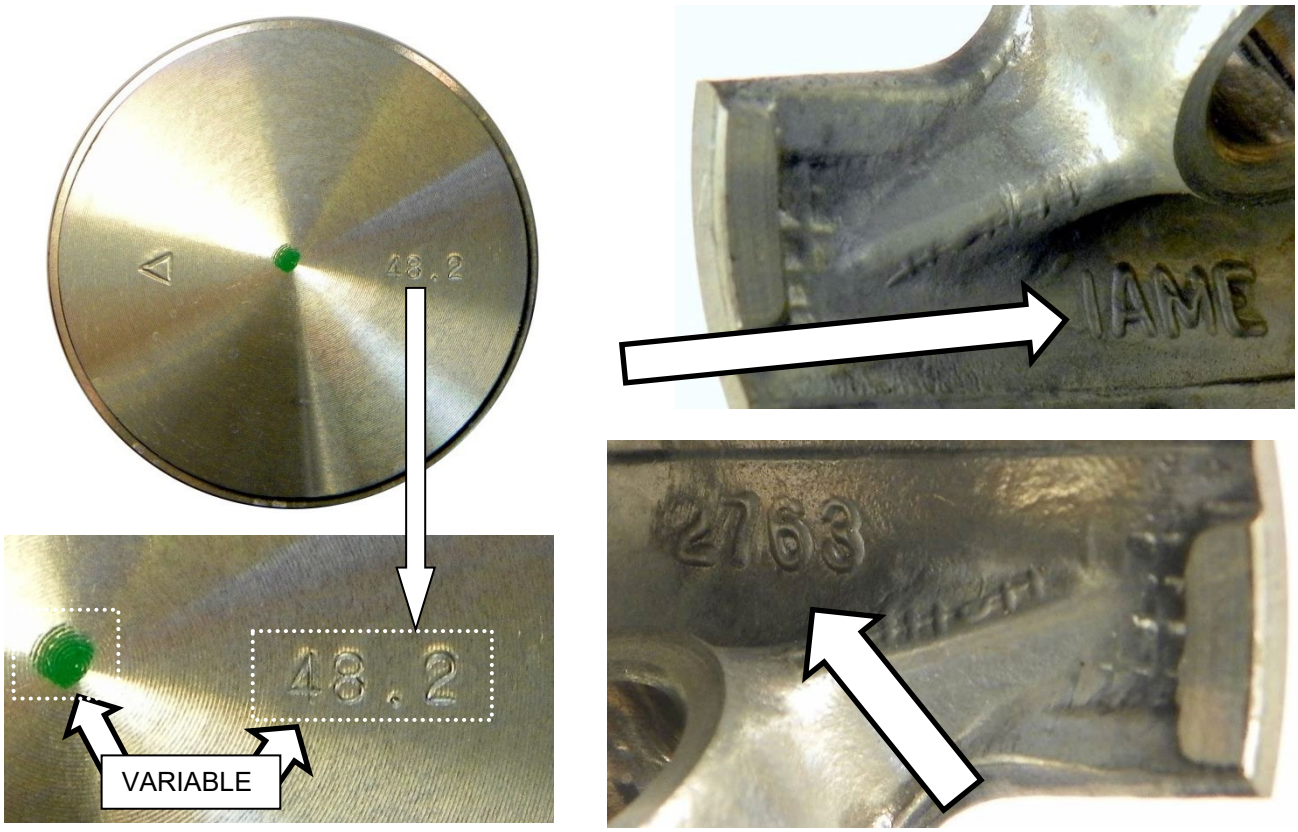

PHOTO IDENTIFICATION CONROD

STARTER IDENTIFICATION MARKING

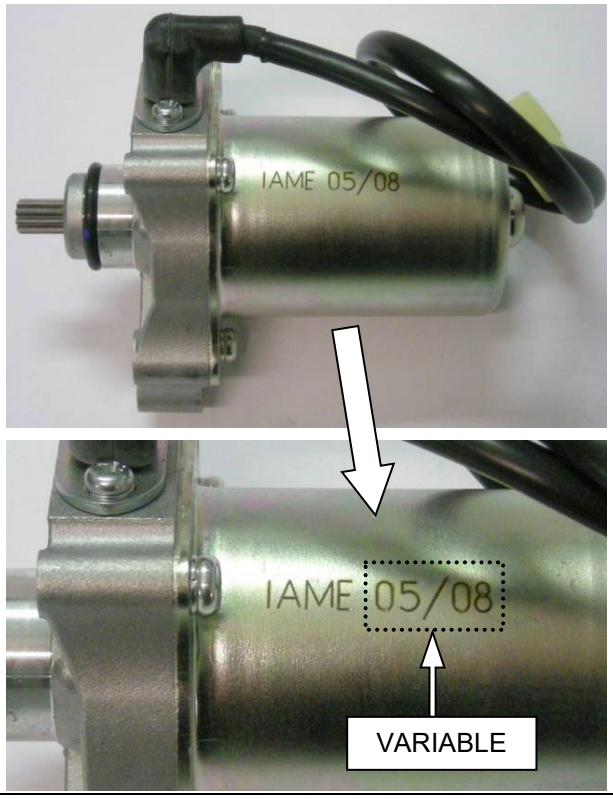

CRANKSHAFT IDENTIFICATION MARKING

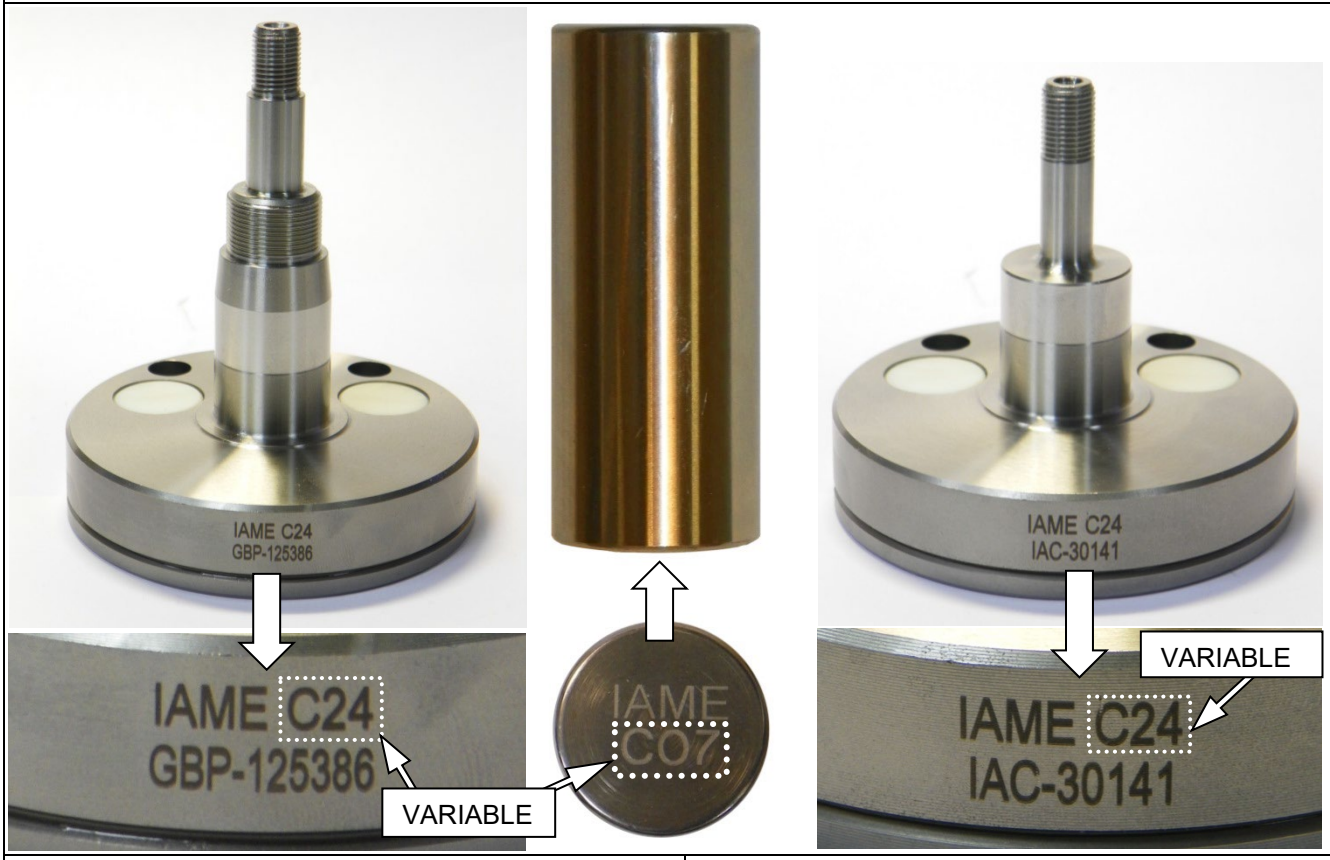

SPROCKET IDENTIFICATION MARKING

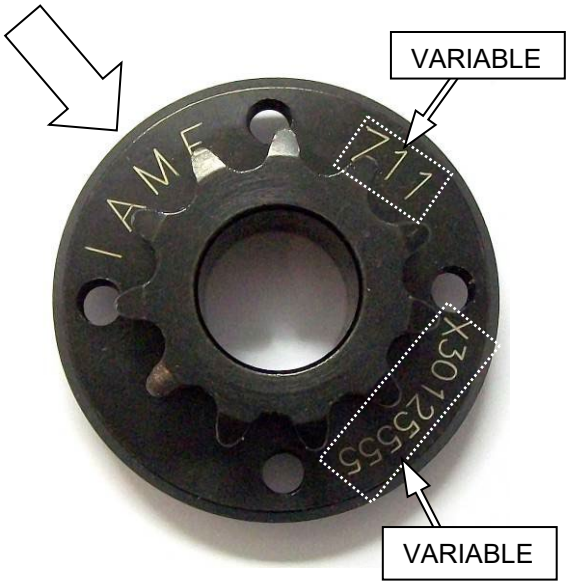

STARTER RING IDENTIFICATION MARKING

CLUTCH BODY IDENTIFICATION MARKING	CLUTCH DRUM IDENTIFICATION MARKING
PHOTO IDENTIFICATION CARBURETOR INLET CONVEYOR	BENDIX COVER IDENTIFICATION MARKING
	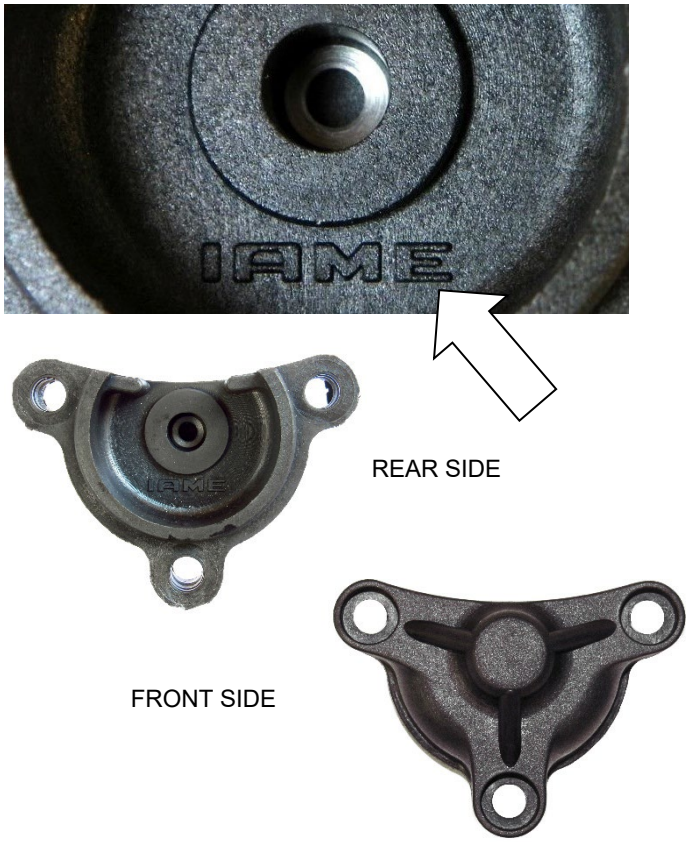

REED GROUP & PETALS IDENTIFICATION MARKING

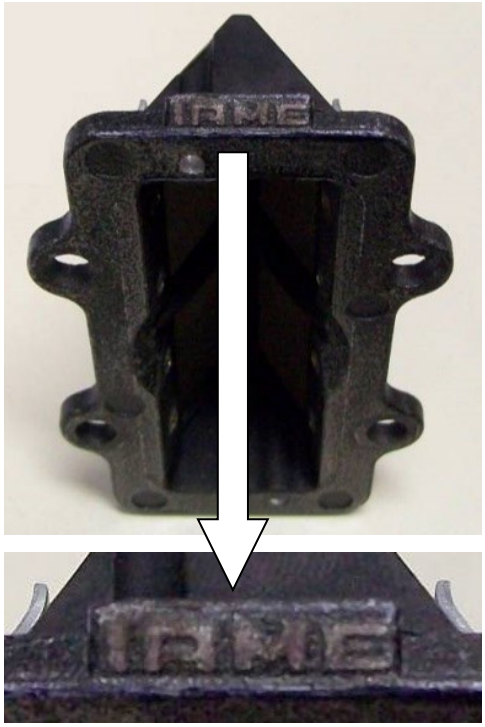

FIBER GLASS

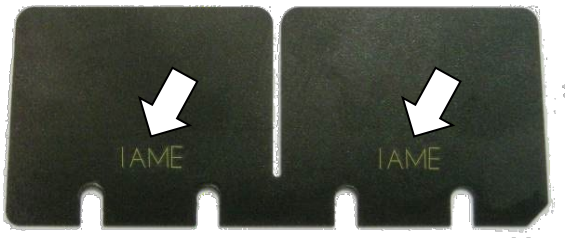

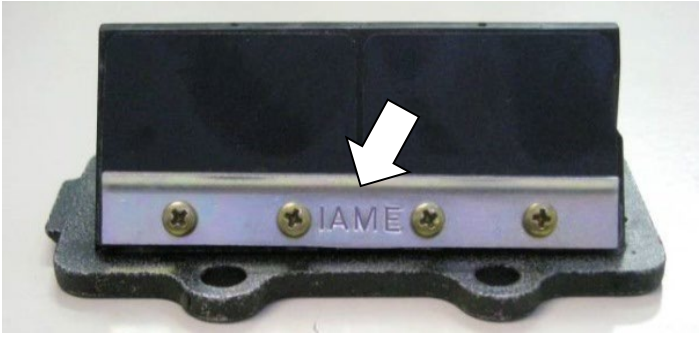

EXHAUST SILENCER IDENTIFICATION MARKING

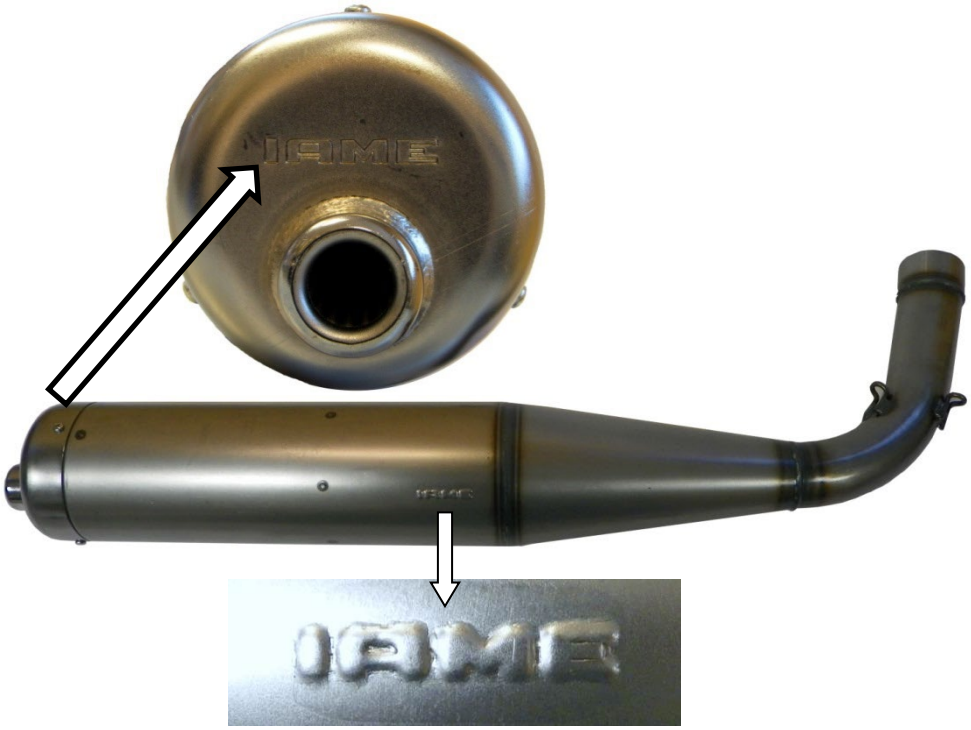

CLUTCH COVER - ALTERNATIVE SHAPE AND SURFACE FINISHING

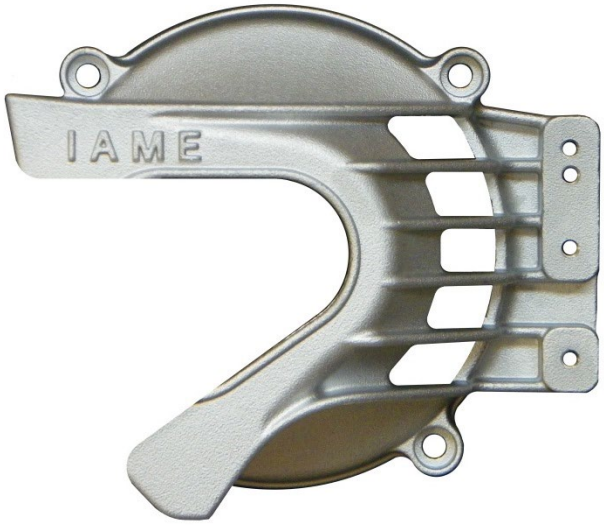

ALTERNATIVE

PHOTO IDENTIFICATION REED GROUP	
CURRENT VERSION	ALTERNATIVE VERSION
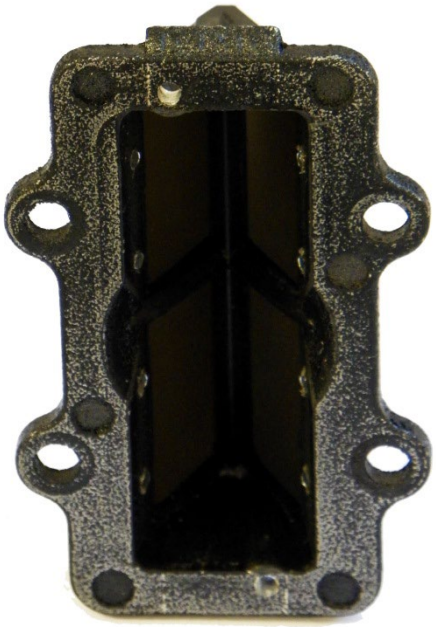	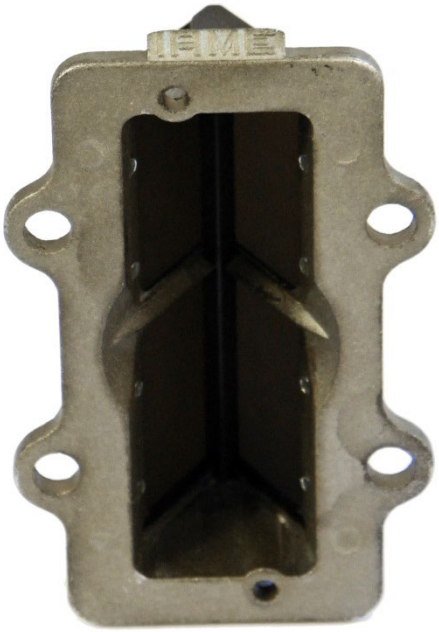

ALTERNATIVE INSTALLATION OF GROUND CABLE ON THE CRANKCASE

STANDARD INSTALLATION

ALTERNATIVE INSTALLATION

CARBURETTOR

Tillotson HW-33A

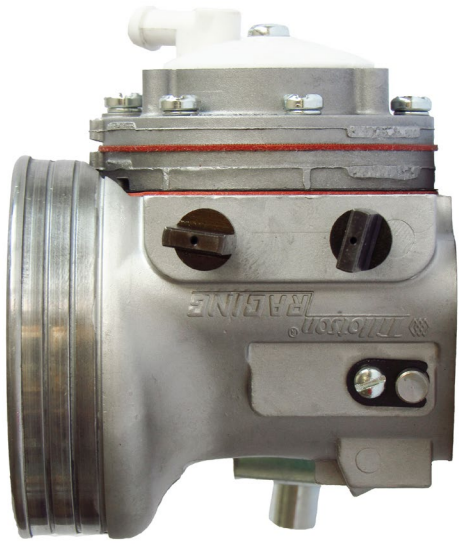	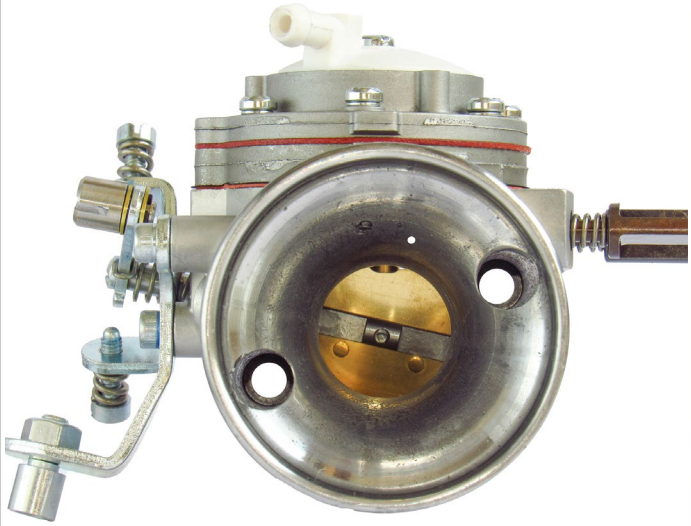
PHOTO OF ADJUSTING SIDE	PHOTO OF INLET SIDE

Manufacturer	**TILLOTSON LTD.**
Make	**TILLOTSON**
Model	**HW-33A**

SECTION VIEW

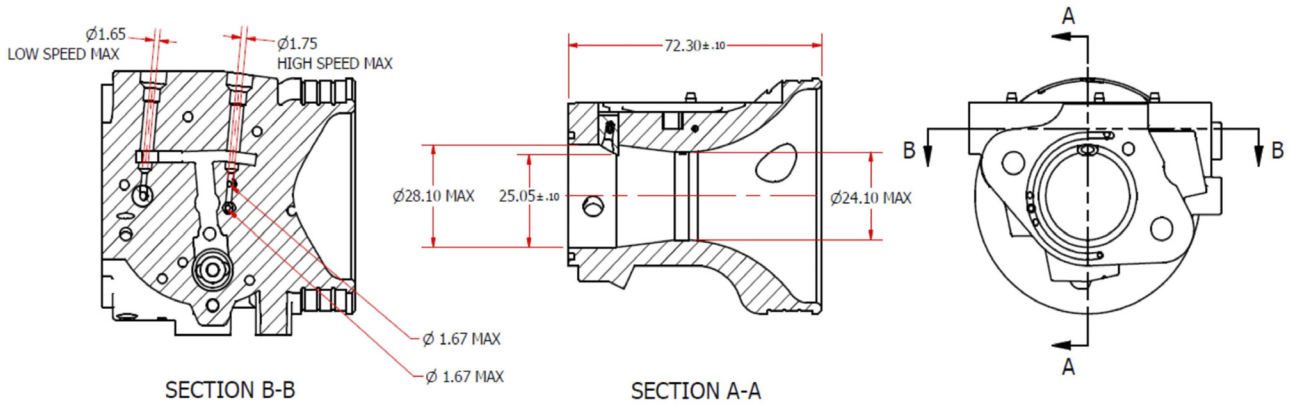

MARKING

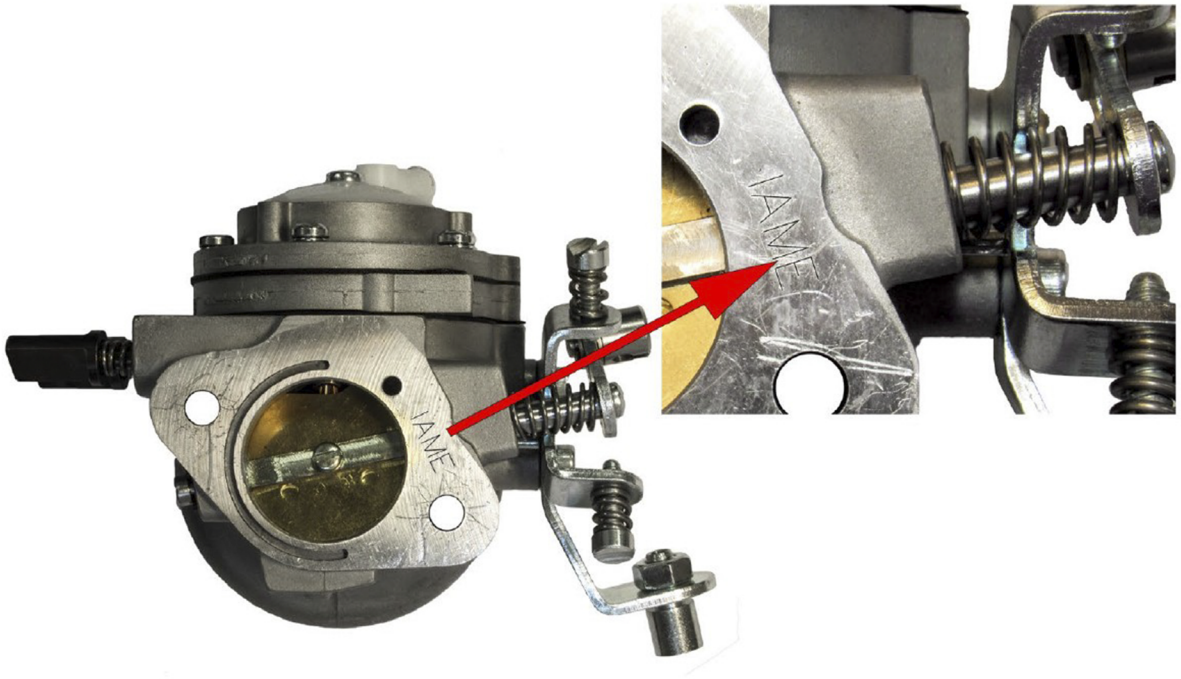

CARBURETTOR DESCRIPTION AND SKETCH OF PARTS

HW-33A

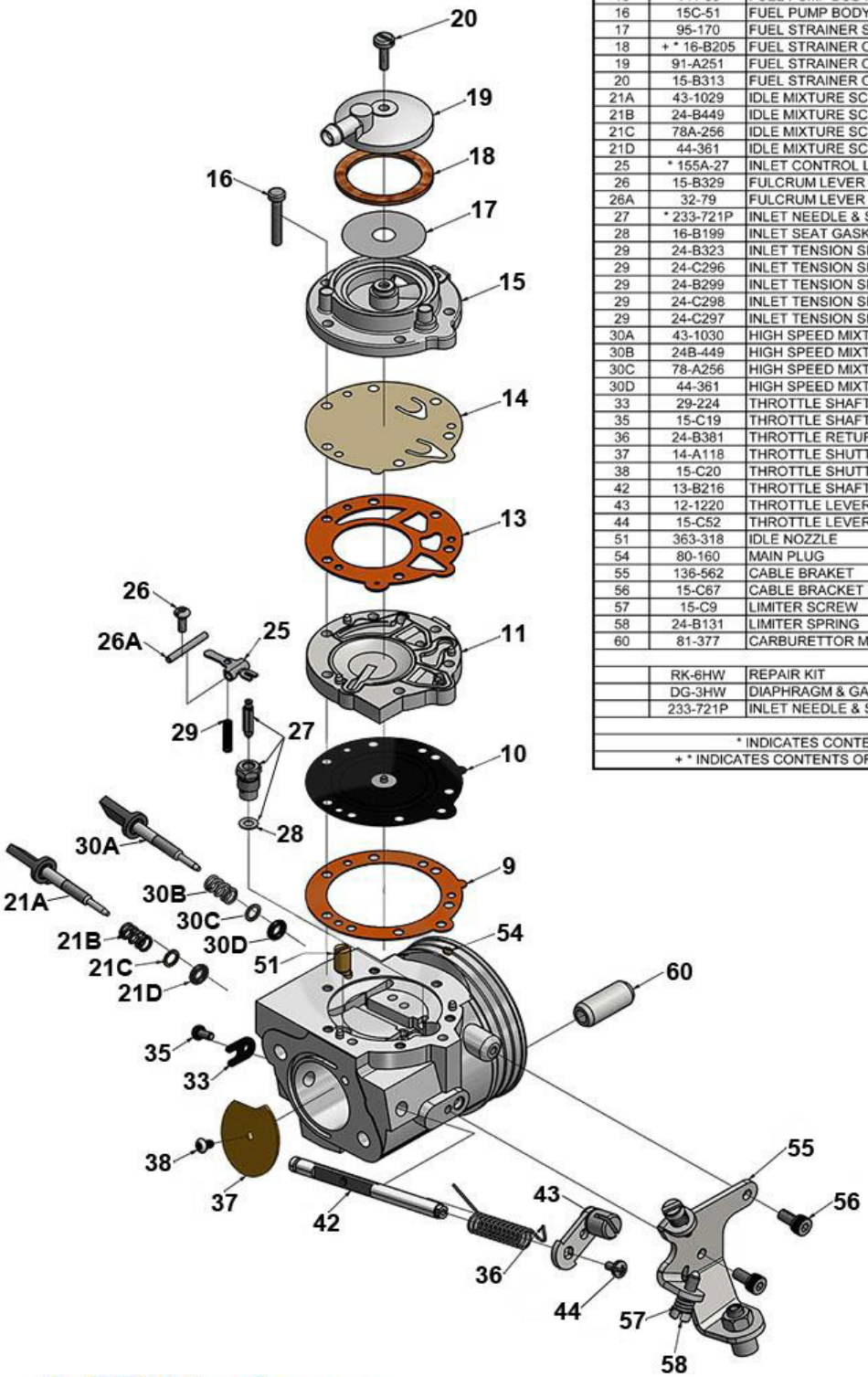

HW-33A CARBURETTOR PARTS LIST			
ITEM	PART NO:	DESCRIPTION	QTY
9	+ * 16-B406	DIAPHRAGM GASKET	1
10	+ * 237-600	DIAPHRAGM	1
11	91A-275	DIAPHRAGM COVER	1
13	+ * 16-B407	FUEL PUMP GASKET	1
14	+ * 237-162	FUEL PUMP DIAPHRAGM	1
15	141-89	FUEL PUMP BODY	1
16	15C-51	FUEL PUMP BODY SCREW	6
17	95-170	FUEL STRAINER SCREEN	1
18	+ * 16-B205	FUEL STRAINER COVER GASKET	1
19	91-A251	FUEL STRAINER COVER	1
20	15-B313	FUEL STRAINER COVER RETAINING SCREW	1
21A	43-1029	IDLE MIXTURE SCREW	1
21B	24-B449	IDLE MIXTURE SCREW SPRING	1
21C	78A-256	IDLE MIXTURE SCREW WASHER	1
21D	44-361	IDLE MIXTURE SCREW PACKING	1
25	* 155A-27	INLET CONTROL LEVER	1
26	15-B329	FULCRUM LEVER SCREW	1
26A	32-79	FULCRUM LEVER PIN	1
27	* 233-721P	INLET NEEDLE & SEAT SET	1
28	16-B199	INLET SEAT GASKET	1
29	24-B323	INLET TENSION SPRING 26G	OPTION
29	24-C296	INLET TENSION SPRING 31G	OPTION
29	24-B299	INLET TENSION SPRING 37G	1
29	24-C298	INLET TENSION SPRING 42G	OPTION
29	24-C297	INLET TENSION SPRING 46G	OPTION
30A	43-1030	HIGH SPEED MIXTURE SCREW	1
30B	24B-449	HIGH SPEED MIXTURE SCREW SPRING	1
30C	78-A256	HIGH SPEED MIXTURE SCREW WASHER	1
30D	44-361	HIGH SPEED MIXTURE SCREW PACKING	1
33	29-224	THROTTLE SHAFT CLIP	1
35	15-C19	THROTTLE SHAFT CLIP RETAINING SCREW	1
36	24-B381	THROTTLE RETURN SPRING	1
37	14-A118	THROTTLE SHUTTER	1
38	15-C20	THROTTLE SHUTTER SCREW	1
42	13-B216	THROTTLE SHAFT	1
43	12-1220	THROTTLE LEVER ASSEMBLY	1
44	15-C52	THROTTLE LEVER RETAINING SCREW	1
51	363-318	IDLE NOZZLE	1
54	80-160	MAIN PLUG	2
55	136-562	CABLE BRAKET	1
56	15-C67	CABLE BRACKET RETAINING SCREW	2
57	15-C9	LIMITER SCREW	2
58	24-B131	LIMITER SPRING	2
60	81-377	CARBURETTOR MOUNTING NUT	2
	RK-6HW	REPAIR KIT	
	DG-3HW	DIAPHRAGM & GASKET	
	233-721P	INLET NEEDLE & SEAT SET	
* INDICATES CONTENTS OF REPAIR KIT			
+ * INDICATES CONTENTS OF DIAPHRAGM & GASKET SET			

Tillotson RACING
Clash Industrial Estate - Tralee - Ireland
www.tillotson-racing,com

PARTS OF CARBURETTOR

REF.8 - P. N°16-B406
DIAPHRAGM GASKET

Thickness = 0.5 ±0.1 mm

REF.11 - P. N° 16-B407
PUMP DIAPHRAGM GASKET

Thickness = 0.8 ±0.1 mm

REF.9 - P. N°237-600
DIAPHRAGM

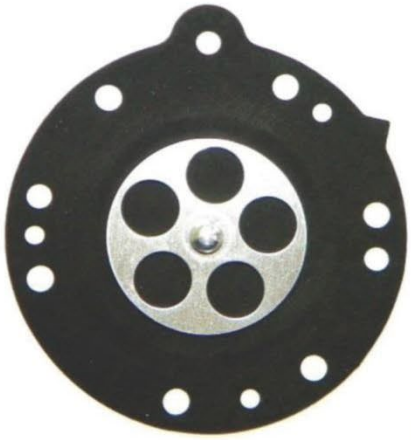

Thickness = 0.13 ±0.07 mm

REF.14 - P. N°237-162
PUMP DIAPHRAGM

Thickness = 0.10 ±0.063 mm

REF.10 - P. N° 91-A275
DIAPHRAGM COVER

Thickness = 6.75 ±0.15 mm

REF.12 - P. N° 141-89
PUMP COVER

Thickness = 12.5 ±0.15 mm

REF.37 - P. N° 14-A118
THROTTLE SHUTTER

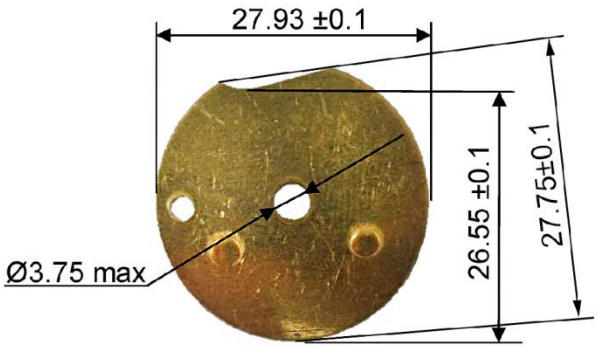

ALTERNATIVE SHAPE

Thickness = 0.84 ±0.1 mm

REF.27 - P. N° 233-721P
SEAT + NEEDLE

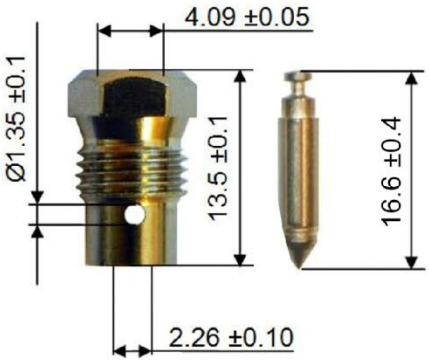

REF.21A - P. N° 43-1029
NEEDLE LOW SPEED

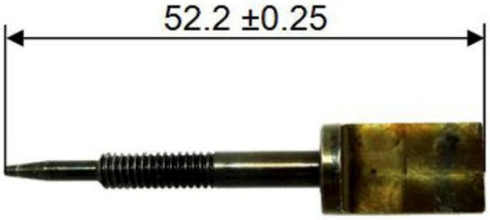

REF.30A - P. N° 43-1030
NEEDLE HIGH SPEED

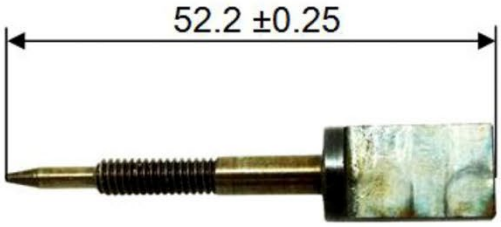

ALTERNATIVE FUEL NEEDLE

HOLE FOR CARBURETTOR SEALING

The carburettor can have this hole for sealing

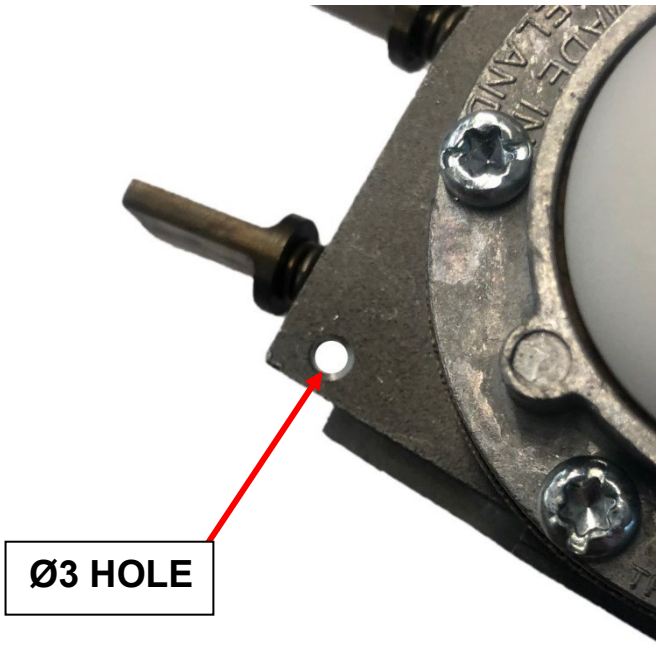

ATOMIZER - HEIGHT LIMITS AND CHECKING TOOL

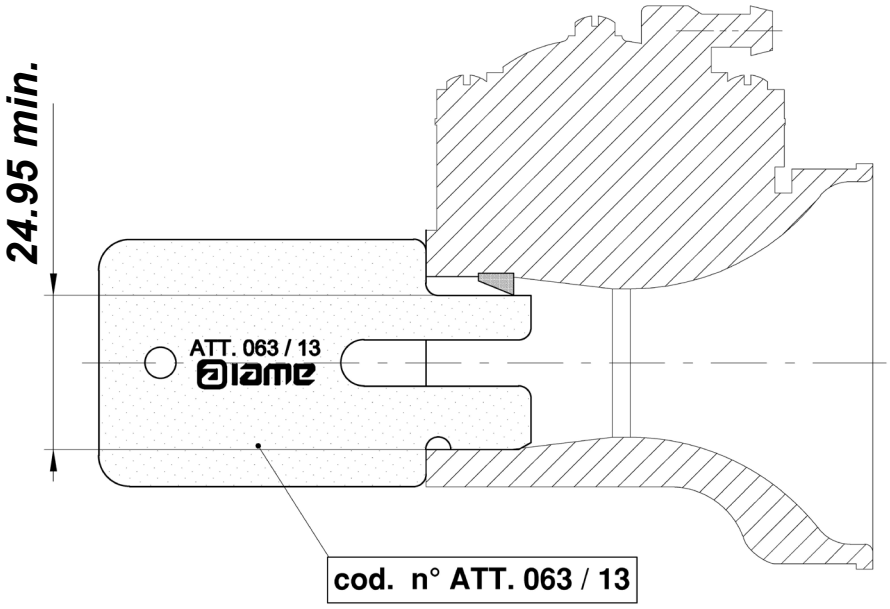

ALTERNATIVE CONROD

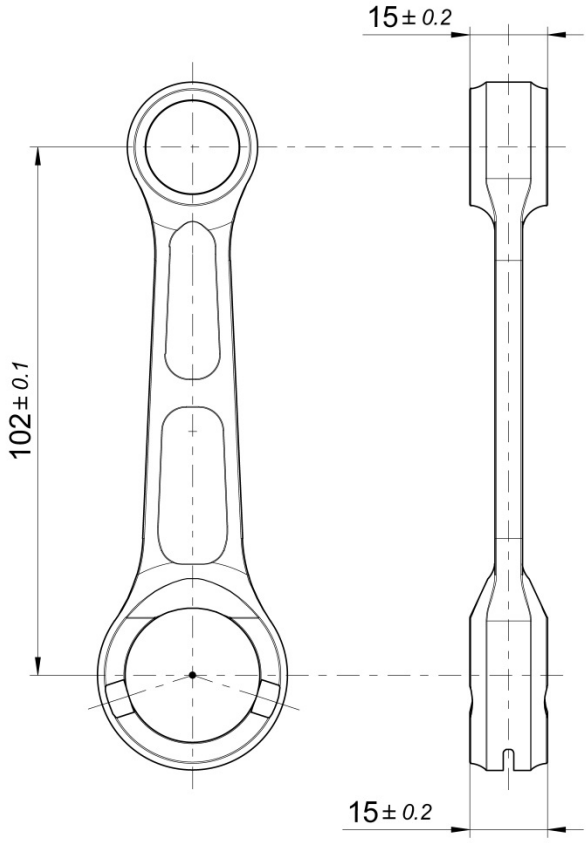

BOTH TYPES OF CONROD CAN BE USED WITH BOTH TYPES OF WASHERS (IN COUPLE)

PHOTO OF THE CONROD BOTH SIDE – ALTERNATIVE

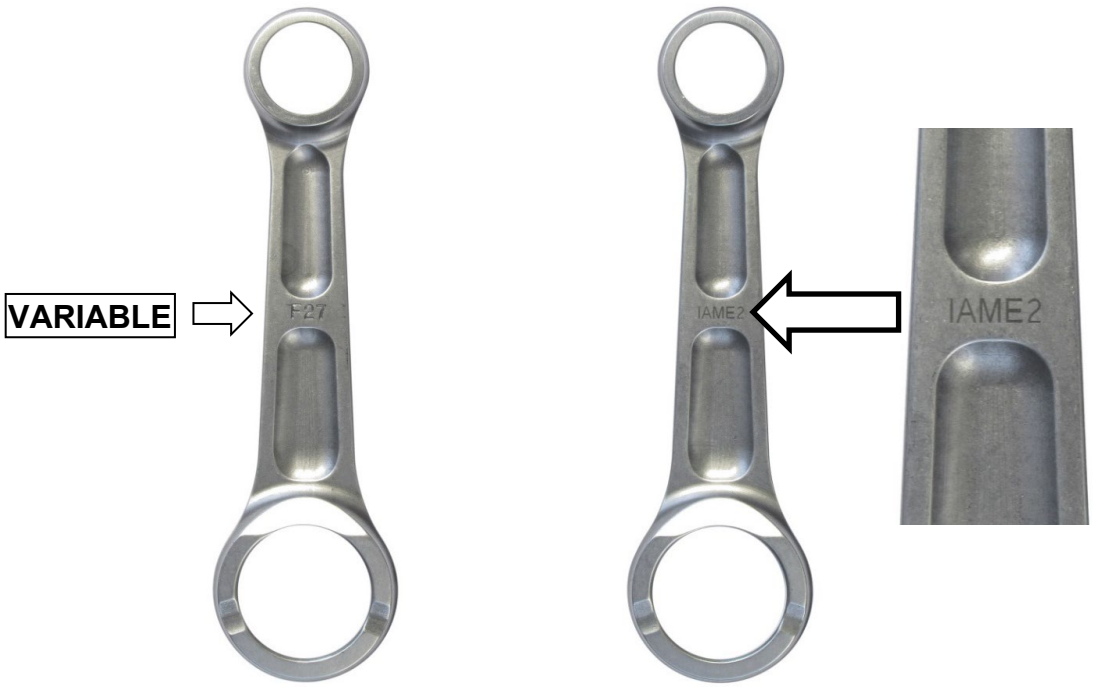

PHOTO IDENTIFICATION OF SMALL END CONROD BEARING – TYPES ALTERNATIVE

TYPE 1

TYPE 2

PHOTO IDENTIFICATION OF SILVER CONROD WASHER – TYPES ALTERNATIVE

TYPE 1

TYPE 2

PARTICULARS WITH ALTERNATIVE NEW LOGO "IAME"	
CYLINDER HEAD	CYLINDER
NEW LOGO	**NEW LOGO**
SEMICARTER TRANSMISSION SIDE	SEMICARTER IGNITION SIDE
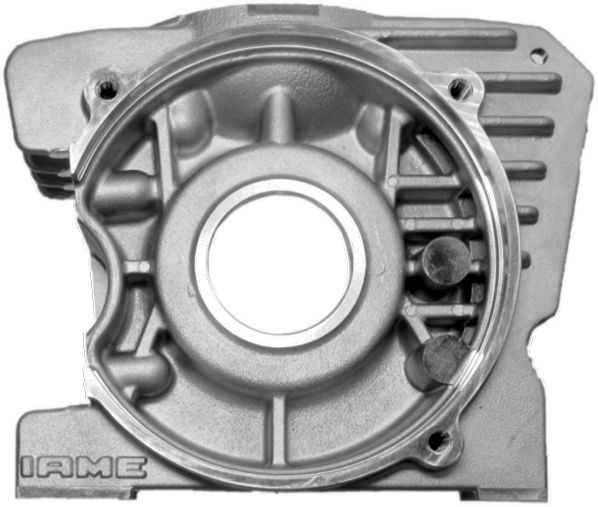 **NEW LOGO**	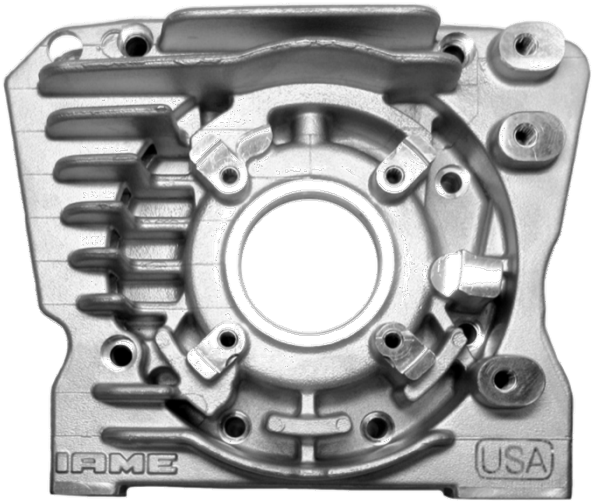 **NEW LOGO**

PARTICULARS WITH ALTERNATIVE NEW LOGO "IAME"	
STARTER SUPPORT	CLUTCH COVER
 NEW LOGO 	 **NEW LOGO**
REED GROUP	CARBURETTOR INLET CONVEYOR
 NEW LOGO 	 **NEW LOGO**

PARTICULARS WITH ALTERNATIVE NEW LOGO "IAME"
EXHAUST

NEW LOGO

NEW LOGO

INLET SILENCER

NEW LOGO

PARTICULARS WITH ALTERNATIVE NEW LOGO "IAME"

THE OTHERS COMPONENTS OF ENGINE THAT ARE MARKED (LASER OR PUNCHING) UNTIL TODAY WITH LOGO OR WRITTEN "IAME"

or

IAME

NOW COULD BE MARKED WITH NEW LOGO "IAME"

or

or

CYLINDER IDENTIFICATION MARKING

CRANKCASE IDENTIFICATION MARKING

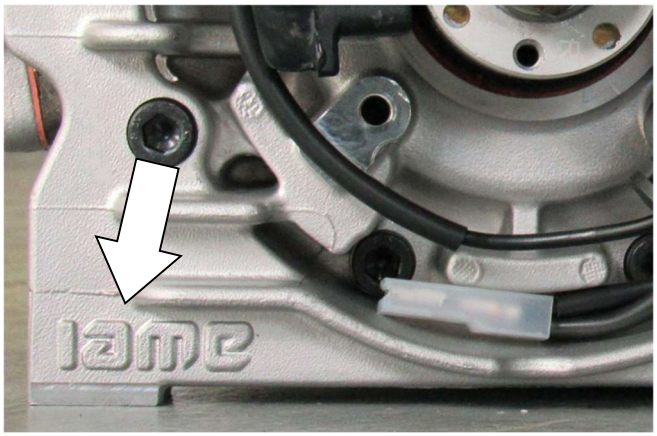
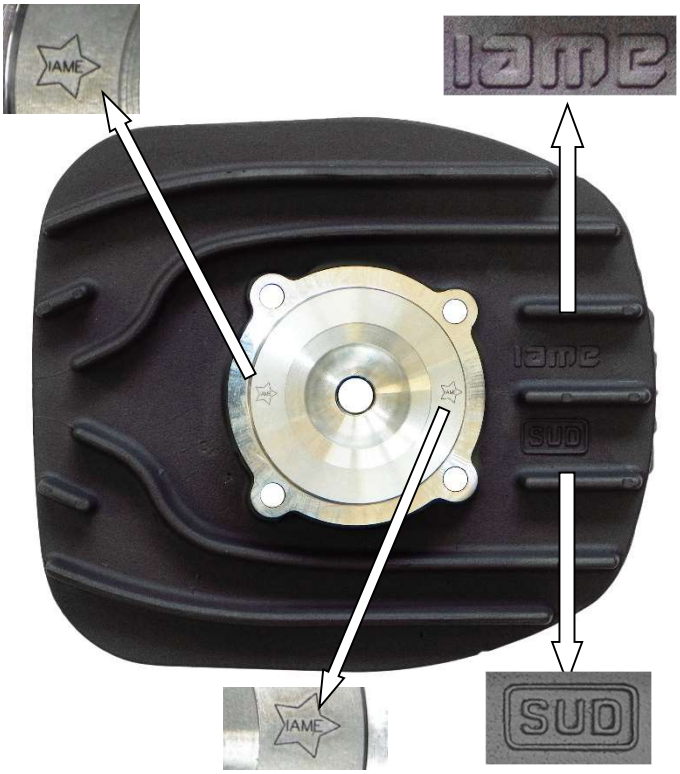
HEAD IDENTIFICATION MARKING